MNSPECT LLC
HELPING YOU COMPLY WITH THE CODE

PHONE: 952-442-7520
FAX: 952-442-7521
EMAIL: INFO@MNSPECT.COM

RESIDENTIAL LAWN IRRIGATION

- A plumbing permit is required for the installation of a lawn irrigation system. Residential lawn irrigation permits are issued over the counter at the municipality office. COMMERCIAL irrigation projects must be submitted for plan review.
- Each address requires a separate permit.
- All materials and the installation of all materials must comply with the Minnesota State Plumbing Code and the manufacturers' installation specifications for each product.

PERMIT CARD (throughout the project) shall be:

POSTED prior to start of work - **VISIBLE** from street or driveway - **ACCESSIBLE** to the inspector

INSPECTION REQUIREMENTS:

- **MUST** schedule during office hours **AT LEAST** one business day prior to required inspection. If a specific date and/or time will be required, more notice may be needed – please plan ahead. A re-inspection fee may be charged for failure to cancel an inspection for which you are not ready, or for failure to pass an inspection.
- Office Hours: Monday - Friday • 8:00 a.m. - 4:30 p.m.
- Phone: (952) 442-7520 or (888) 446-1801

Inspection:

- **Final:** After the installation process is complete. Inspector will verify the installation of the proper backflow prevention device, piping, and the automatic rain sensor.

Warning: The inspector may issue an order to remove materials to verify compliance with the MN State Building Code and manufacturer's installation requirements.
If a re-inspection is required, a re-inspection fee will apply. The permit holder (the signing applicant) or the permit holder's representative must meet the inspector at the site to provide access. The re-inspection will not be conducted if the re-inspection fee is not paid.

Note: The State of Minnesota requires that all residential building contractors, remodelers, roofers, plumbers, and electricians obtain a state license unless they qualify for a specific exemption from the licensing requirements. Any person claiming an exemption must provide a copy of a Certificate of Exemption from the Department of Labor & Industry to the Municipality before a permit can be issued.

Note: To determine whether a particular contractor is required to be licensed or to check on the licensing status of individual contractors, please call the Minnesota Department of Labor & Industry at 651-284-5065 or toll free 1-800-342-5354.

Note: For specific code requirements, please contact the Building Inspection Department at 952-442-7520 or 888-446-1801 or e-mail: info@mnspect.com.

PROJECT CHECKLIST:

☐ One of the following 3 approved backflow prevention devices is required on all systems. (See following pages for descriptions and requirements.)
- Pressure Vacuum Breaker (PVB) (A.S.S.E. 1020)
- Atmospheric Vacuum Breaker (AVB) (A.S.S.E. 1001)
- Reduced Pressure Zone (RPZ) (A.S.S.E. 1013)

☐ An automatic rain sensor is required on any newly installed system.

☐ Please check with the municipality regarding separate water meter options or requirements.

MNSPECT

PRESSURE VACUUM BREAKER (PVB)

A PVB is the most common type of backflow preventer used for lawn sprinklers. The requirements for a PVB are:

- Must be installed at least 12” above highest sprinkler head or discharge outlet.
- No possibility of back pressure permitted.
- Continuous line pressure permitted.
- If a hose bib is installed ahead of the PVB and used for the purpose of drainage, a hose connection vacuum breaker must be installed.
- PVB must be installed in a vertical position.

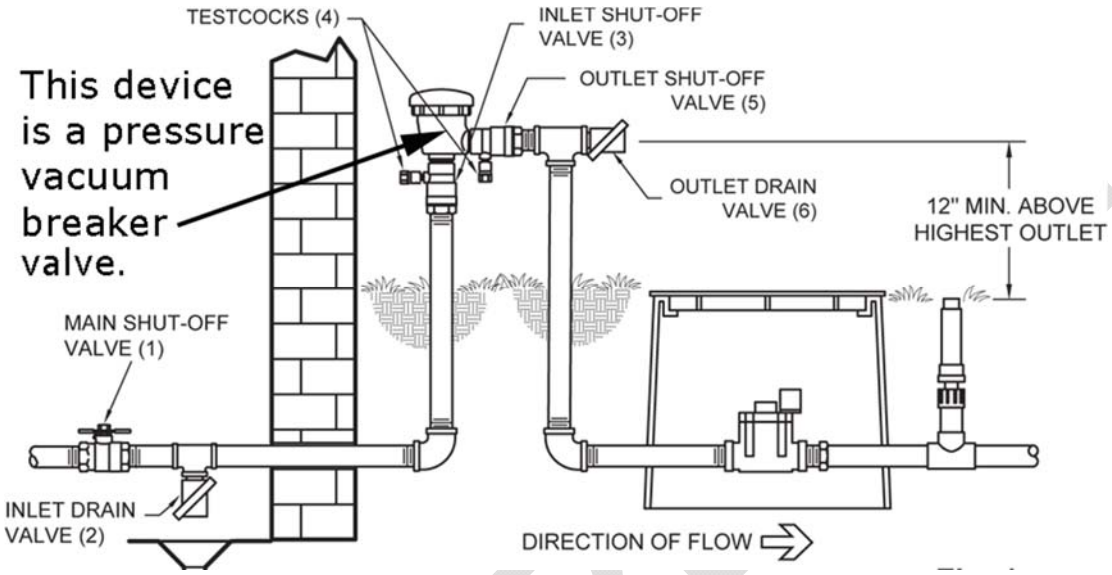

ATMOSPHERIC VACUUM BREAKER (AVB)

Few system designs will accommodate an AVB backflow preventer. It can be used for lawn sprinklers if the device is properly installed. The requirements are:

- The device must be installed at least 12” above the highest sprinkler outlet on the non-pressure side of the last control valve.
- There shall be no control valves downstream from the backflow.
- No possibility of back pressure permitted.
- No more than 8 hours of continuous line pressure permitted.
- One AVB required for each irrigation zone.
- Some AVBs have an electronic solenoid valve built into the assembly. The A.S.S.E. 1001 number must be factory marked on the assembly.

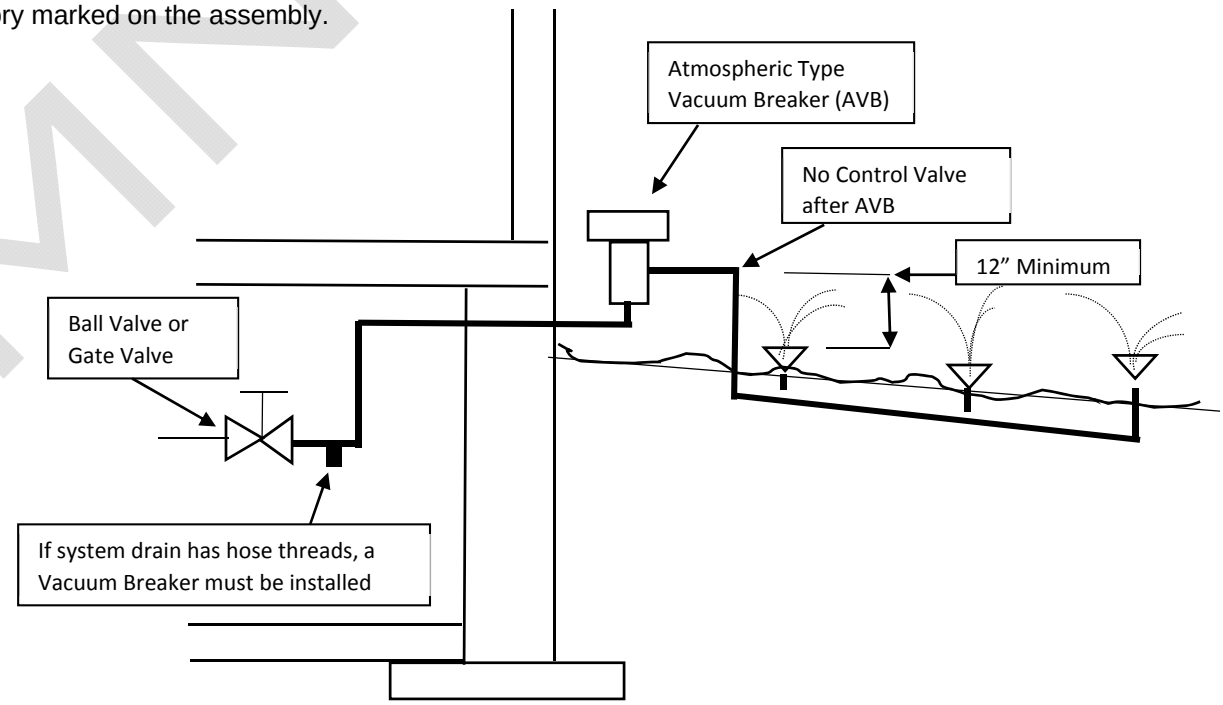

REDUCED PRESSURE ZONE (RPZ) BACKFLOW PREVENTER

A Reduced Pressure Zone type backflow preventer must be installed on lawn sprinkler systems when any sprinkler outlet is higher than the backflow preventer. (May be subject to constant static pressure, back pressure, and back siphonage.) Use RPZ as last resort backflow preventer if AVB-PVB will not work. An RPZ must be tested upon installation and yearly thereafter, and must be rebuilt every 5 years. Generally, an RPZ must be installed in conditioned space or removed after every season to protect from freezing.

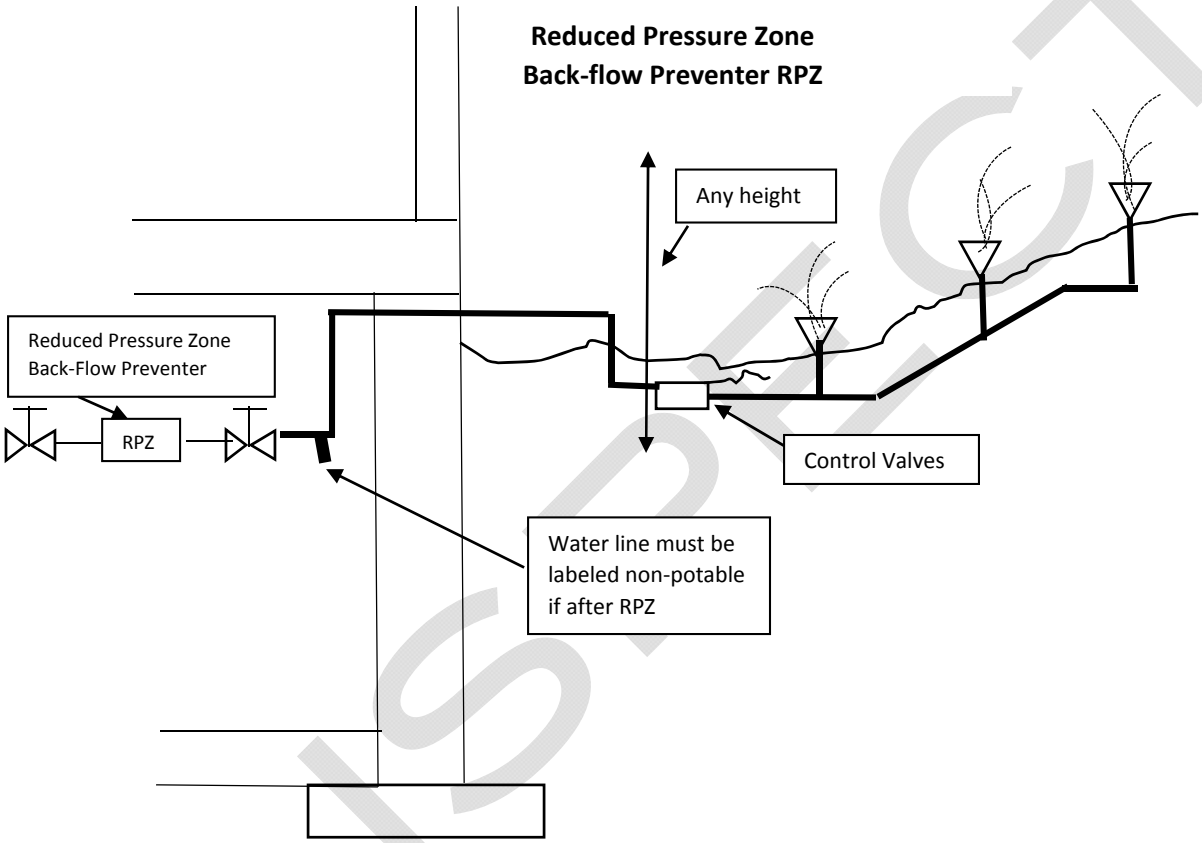

MNSPECT